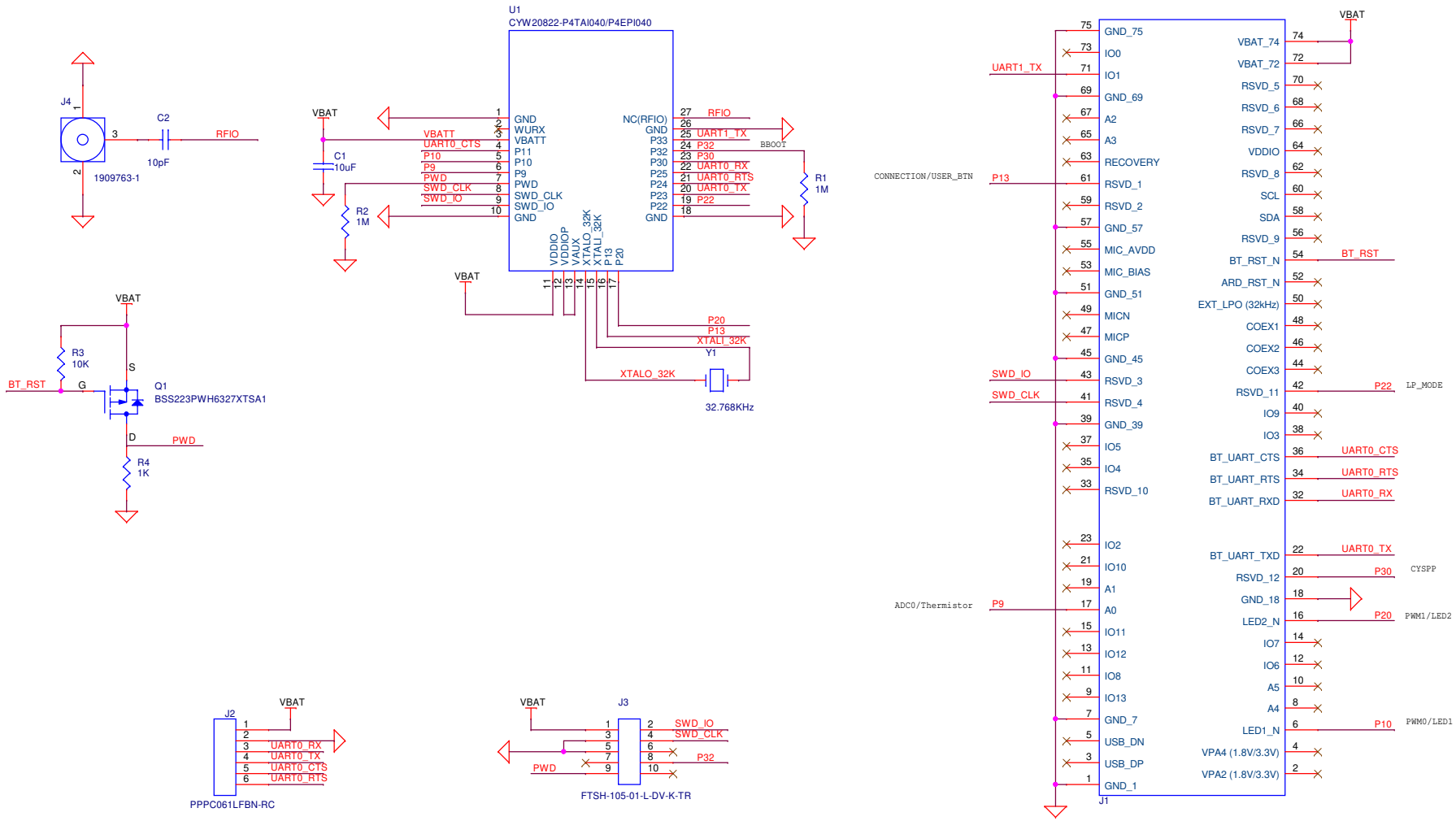

Legal Disclaimer :
The information given in this document shall in no event be regarded as a guarantee of conditions or characteristics. With respect to any examples or hints given herein, any typical values stated herein and/or any information regarding the application of the device, Infineon Technologies hereby disclaims any and all warranties and liabilities of any kind, including without limitation, warranties of non-infringement of intellectual property rights of any third party.

SCH Title : CYW920822M2P4XXI040				
Page Title: Module				
Size	Document Number	Drawn By	Approved By	Rev
B	630-20192-01	XJZH	<Approved>	1.1
Date: Tuesday, August 08, 2023			Sheet 1 of 2	

REVISION HISTORY

REV	DESCRIPTION OF CHANGE	DATE
1.0	Initial Release	6/1/2023
1.1	Change Q1 to PMOS	8/8/2023

Legal Disclaimer :
The information given in this document shall in no event be regarded as a guarantee of conditions or characteristics. With respect to any examples or hints given herein, any typical values stated herein and/or any information regarding the application of the device, Infineon Technologies hereby disclaims any and all warranties and liabilities of any kind, including without limitation, warranties of non-infringement of intellectual property rights of any third party.

SCH Title : CYW920822M2P4XXI040

Page Title: Revision History

Size	Document Number	Drawn By	Approved By	Rev
A4	630-20192-01	XJZH	<Approved>	1.1

Date: Tuesday, August 08, 2023 Sheet 2 of 2